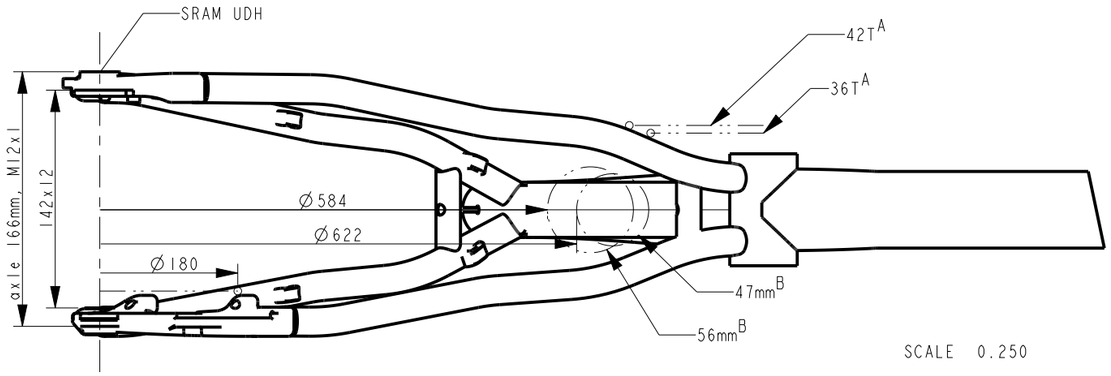

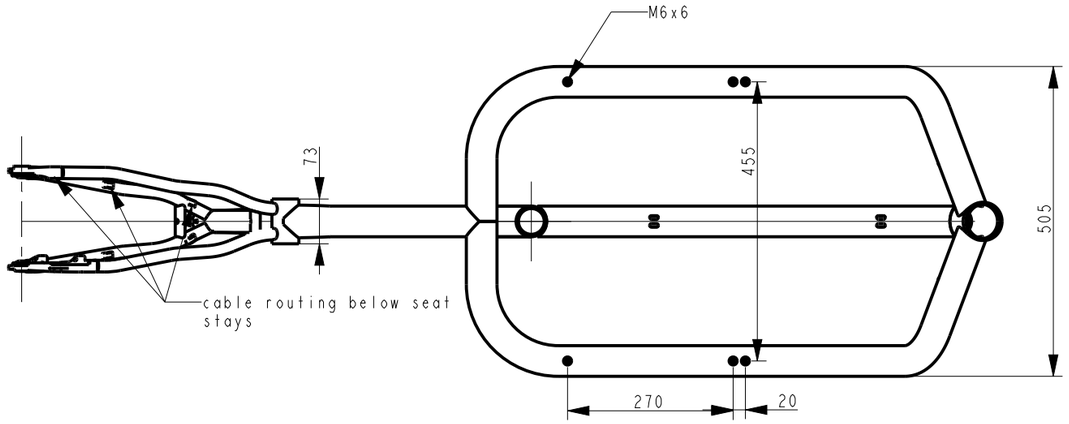

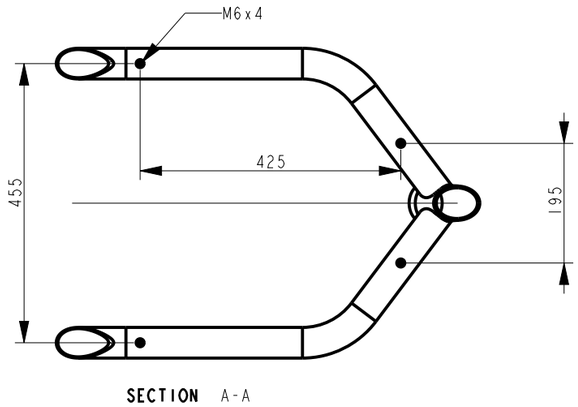

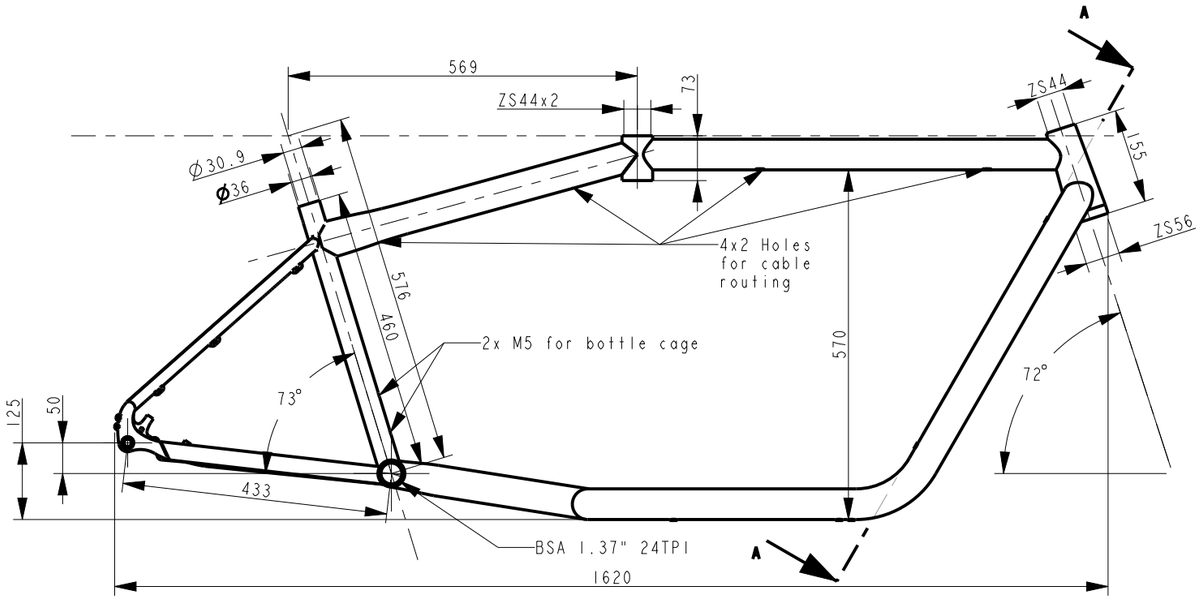

A 36T at 50 mm chain line (single or triple MTB crankset)
42T at 55 mm chain line (triple MTB crankset)

B Clearance for 47 mm tire using 622 mm rim (47x700c)
Clearance for 53 mm tire using 584 mm rim (27.5x2.1")

MATERIAL	NAME		
6061 T6	2023 Original		GinkGo
	WEIGHT g (ONLY FOR INFORMATION) 4800 unpainted 5300 painted		

PAPER	DRAWN BY & DATE	PROJECTION	SCALE	STATE		ISSUE	SHEET
A3	MNo 2023-01-16		0.100	1	000-013-020	2	1(1)

0 10 20 30 40 50 60 70 80 90 100